1.0 GENERAL NOTES
- 1.1 ALL METRIC DIMENSIONS ARE IN BRACKETS [X. X]
- 1.2 FOR PATENT INFO: https://www.adwpat.com

2.0 DESIGN NOTES
- 2.1 ANY HAZARDS OR OBSTRUCTIONS TO THE CLIMBING FACILITY AND SAFETY CLIMB MUST BE IDENTIFIED PRIOR TO INSTALLING THE APPURTENANCE. ADDITIONAL PRODUCTS MAY BE REQUIRED TO MAINTAIN THE INTEGRITY OF THE SAFETY CLIMB. DURING INSTALLATION, TEMPORARY AND/OR PERMANENT PRECAUTIONARY MEASURES SHOULD BE TAKEN TO PRESERVE THE CLIMBING FACILITY AND/OR SAFETY CLIMB.

3.0 MANUFACTURING/SPECIAL REQUIREMENTS
- 3.1 TIGHTEN ALL BOLTS SECURING FLAT PLATES BY THE TURN-OF-NUT METHOD. TIGHTEN ALL U-BOLTS USING TURN-OF-NUT METHOD WITH ATTENTION TO LEAVE EQUAL DISTANCE AND EQUAL FORCE ON EACH LEG OF THE U-BOLT.

4.0 TEST

5.0 PACKAGING
- 5.1 PACKAGING SHALL MEET ANDREW REQUIREMENTS PER DOCUMENT IS-PL-3005
- 5.2 PRINTED DOCUMENT TO BE PLACED INSIDE POLYBAG AND THEN IN SHIPPING CONTAINER
- 5.3 EXTRA HARDWARE MAY BE SUPPLIED, BAGGED AND SHIPPED

REVISIONS			
REV.	DESCRIPTION	DATE	APPROVED
A	INITIAL RELEASE	ACG 29MAR07	TP
B	UPDATED DRAWING FORMAT TO NEW	JJ1095 09SEP25	BA1025 50104850AMO

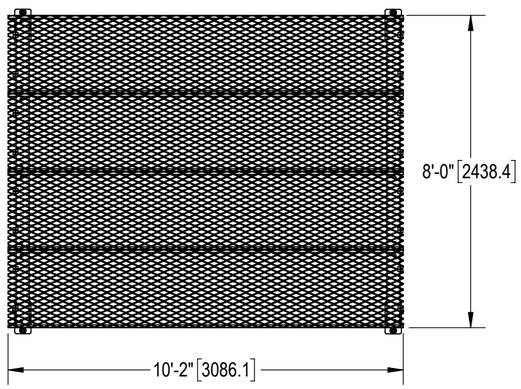

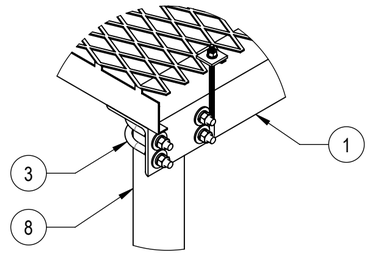

DETAIL A
SCALE 1 : 8

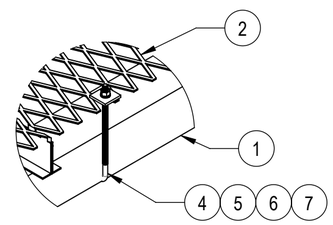

DETAIL B
SCALE 1 : 8

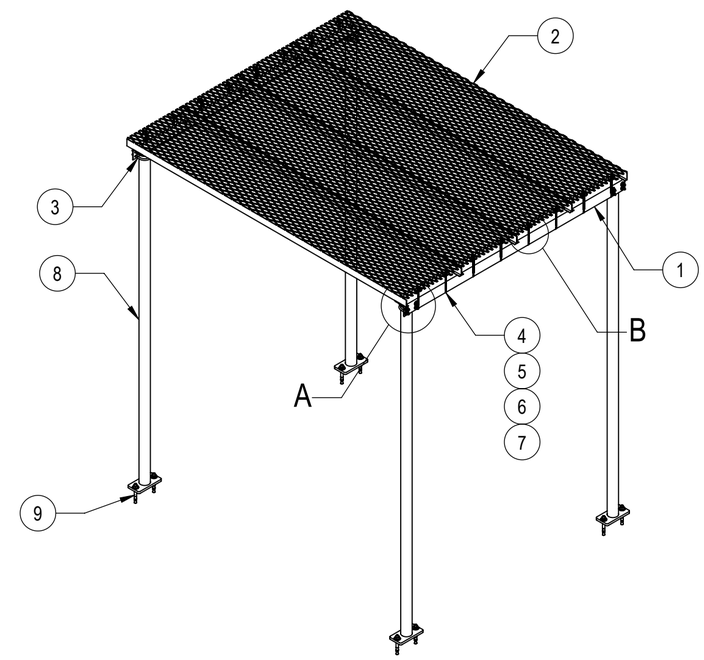

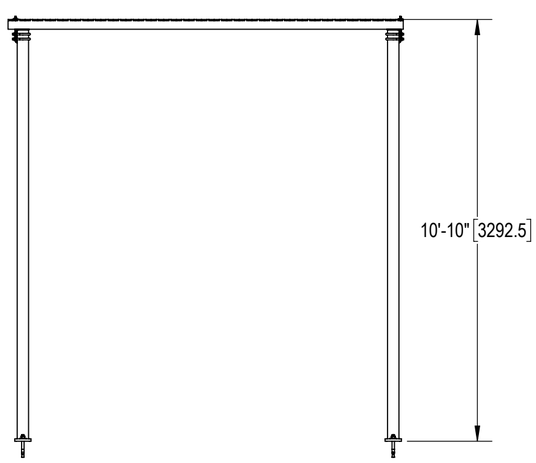

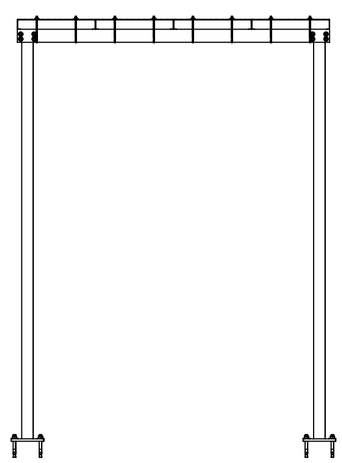

COMPONENT PART NUMBERS PROVIDED FOR ASSEMBLY PURPOSES;
INDIVIDUAL COMPONENTS MAY BE SHIPPED AS PARTS WITHIN AN INCLUDED KIT.

ITEM	PART NO.	DESCRIPTION	QTY.	WEIGHT	NOTE NO.
1	MTC966001	8' ICE SHIELD SUPPORT BRACKET	2	51.95 LBS	
2	WB-CY210	SAFETY GRATED WAVEGUIDE BRIDGE CHANNEL	4	49.84 LBS	
3	GUB-4355	1/2" X 3-5/8" X 5" GALV U-BOLT	8	0.71 LBS	
4	GJB0380	8" GALV J-BOLT KIT	16	0.23 LBS	
5	MT-387	SQUARE WASHER 1-1/2"X1-1/2" W/ 7/16 HOLE	16	0.11 LBS	
6	GWL-03	3/8" GALV LOCK WASHER	16	0.01 LBS	
7	GN-03	3/8" GALV HEX NUT	16	0.02 LBS	
8	MF12601	BASE SHOE WELDMENT,10' 6"	4	53.81 LBS	
9	MT-287	3/4" ANCHOR BOLT	8	1.08 LBS	

ANDREW® an Amphenol company

TOLERANCES
1 PLACE .X[.X] ± 0.2[6.3]
2 PLACE .XX[.X] ± 0.12[3.0]
3 PLACE .XXX[.X] ± 0.060[1.5]
ANGLES ± 2°

SAP MATERIAL MASTER: **IC-0810-S**

FINISH

MATERIAL

UNLESS OTHERWISE SPECIFIED DIMENSIONS ARE IN INCHES INTERPRET PER ANSI Y 14.5M-1994

	NAME	DATE
CE	ACG	03/29/2007
RW	LL1090	09/18/2025
AD	YMENG	09/18/2025
RE	YMENG	09/24/2025

ECN 50104850AMO

TITLE: **8' X 10' ICE CANOPY W/ BASE SHOE LEGS**

SCALE: **1:36**

DOCUMENT NO.: **IC-0810-S**

DENSITY		lbs/in³
MASS	540.14	lbs
VOLUME	1904.43	in³
SURFACE AREA	31350.44	in²
HEIGHT	99.8"	
LENGTH	121.5"	
WIDTH	135.6"	

SIZE: **C**

Auth Group: INSL

MODEL VERSION	MODEL STATUS	MODEL REVISION	DRAWING VERSION	DRAWING STATUS	DRAWING REVISION	SHEET
00	RE	A	01	RE	B	1 OF 1

Confidential