1.0 GENERAL NOTES
- 1.1 ALL METRIC DIMENSIONS ARE IN BRACKETS [X. X]
- 1.2 FOR PATENT INFO: https://www.adwpat.com

2.0 DESIGN NOTES

3.0 MANUFACTURING/SPECIAL REQUIREMENTS
- 3.1 TIGHTEN ALL BOLTS SECURING FLAT PLATES BY THE TURN-OF-NUT METHOD. TIGHTEN ALL U-BOLTS USING TURN-OF-NUT METHOD WITH ATTENTION TO LEAVE EQUAL DISTANCE AND EQUAL FORCE ON EACH LEG OF THE U-BOLT.

4.0 TEST

5.0 PACKAGING
- 5.1 PACKAGING SHALL MEET ANDREW REQUIREMENTS PER DOCUMENT IS-PL-3005
- 5.2 PRINTED DOCUMENT TO BE PLACED INSIDE POLYBAG AND THEN IN SHIPPING CONTAINER
- 5.3 EXTRA HARDWARE MAY BE SUPPLIED, BAGGED AND SHIPPED

REVISIONS			
REV.	DESCRIPTION	DATE	APPROVED
A	INITIAL RELEASE	JTS 04/08/01	
B	UPDATED DRAWING TO NEW FORMAT	RY1002 14OCT25	BA1025 50105335AMO

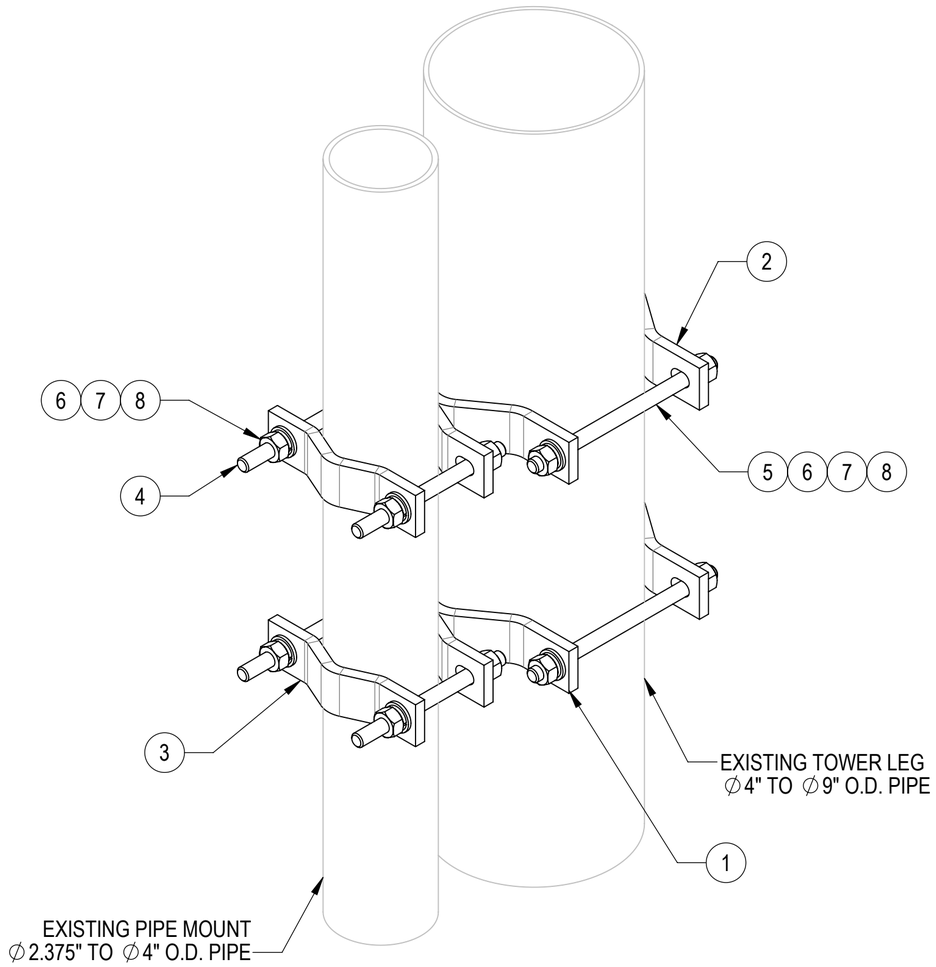

COMPONENT PART NUMBERS PROVIDED FOR ASSEMBLY PURPOSES;
INDIVIDUAL COMPONENTS MAY BE SHIPPED AS PARTS WITHIN AN INCLUDED KIT.

ITEM	PART NO.	DESCRIPTION	QTY.	WEIGHT	NOTE NO.
1	JSS	DISH TO MEDIUM PIPE ADAPTER	2	5.57 LBS	
2	MCP10	CLAMP HALF 1/2" 5/8" H/W 2.5-9 PIPE	2	3.40 LBS	
3	DCP10	CLAMP HALF:1/2", 11/16" HOLE,5-3/4"	2	2.21 LBS	
4	MT-381-8	5/8" X 8" GALV THREADED ROD	4	0.69 LBS	
5	MT-381-10	5/8" X 10" GALV THREADED ROD	4	0.86 LBS	
6	GWF05A	GALV FLAT WASHER HARDENED 5/8", 1.3OD	16	0.04 LBS	
7	GWL-05	5/8" GALV LOCK WASHER	16	0.03 LBS	
8	GN-05A	5/8" GALV HEX NUT (A194 2H)	16	0.12 LBS	

ANDREW® an Amphenol company

TOLERANCES
1 PLACE .X[.X] ± 0.06[1.5] 3 PLACE .XXX[.X] ± 0.010[0.3]
2 PLACE .XX[.X] ± 0.03[0.8] ANGLES ± 2°

SAP MATERIAL MASTER: **JS-S100**

FINISH

MATERIAL

UNLESS OTHERWISE SPECIFIED DIMENSIONS ARE IN INCHES INTERPRET PER ANSI Y 14.5M-1994

	NAME	DATE
CE	ACG	10/17/05
RW	RY1002	10/14/2025
AD	YMENG	10/16/2025
RE	YMENG	10/16/2025
ECN	50105335AMO	

TITLE: **ADPTR,2-3/8"-4"TO 4"-9" OD,PIPE-PIPE**

SCALE: **1:4**

DOCUMENT NO.: **JS-S100**

DENSITY		lbs/in³
MASS	31.48	lbs
VOLUME	111.64	in³
SURFACE AREA	731.76	in²
HEIGHT		
LENGTH	17"	
WIDTH	12"	

SIZE: **C**

Auth Group: INSL

MODEL			DRAWING			SHEET
VERSION	STATUS	REVISION	VERSION	STATUS	REVISION	
01	RE	**B**	01	RE	**B**	1 OF 1

Confidential