REVISIONS			
REV.	DESCRIPTION	DATE	APPROVED
A	INITIAL RELEASE	JTS 06APR01	TP
B	ADD PACK; CHG BOM	CEB 30MAR16	TP
C	UPDATED DRAWING FORAMT	LL1090 27OCT25	BA1025 50105519AMO

1.0 GENERAL NOTES
- 1.1 ALL METRIC DIMENSIONS ARE IN BRACKETS [X. X]
- 1.2 FOR PATENT INFO: https://www.adwpat.com

2.0 DESIGN NOTES
- 2.1 ANY HAZARDS OR OBSTRUCTIONS TO THE CLIMBING FACILITY AND SAFETY CLIMB MUST BE IDENTIFIED PRIOR TO INSTALLING THE APPURTENANCE. ADDITIONAL PRODUCTS MAY BE REQUIRED TO MAINTAIN THE INTEGRITY OF THE SAFETY CLIMB. DURING INSTALLATION, TEMPORARY AND/OR PERMANENT PRECAUTIONARY MEASURES SHOULD BE TAKEN TO PRESERVE THE CLIMBING FACILITY AND/OR SAFETY CLIMB.

3.0 MANUFACTURING/SPECIAL REQUIREMENTS
- 3.1 TIGHTEN ALL BOLTS SECURING FLAT PLATES BY THE TURN-OF-NUT METHOD.
- 3.2 INCLUDED SLEEVES (ITEMS 7 & 8) & NUT (ITEM 11) TO BE INSERTED IF REQUIRED FOR TOWER TAPER.
- 3.3 OFFSET SLEEVES MAY BE CUT FOR DIFFERENT TAPER

4.0 TEST

5.0 PACKAGING
- 5.1 PACKAGING SHALL MEET ANDREW REQUIREMENTS PER DOCUMENT IS-PL-3005
- 5.2 PRINTED DOCUMENT TO BE PLACED INSIDE POLYBAG AND THEN IN SHIPPING CONTAINER
- 5.3 EXTRA HARDWARE MAY BE SUPPLIED, BAGGED AND SHIPPED

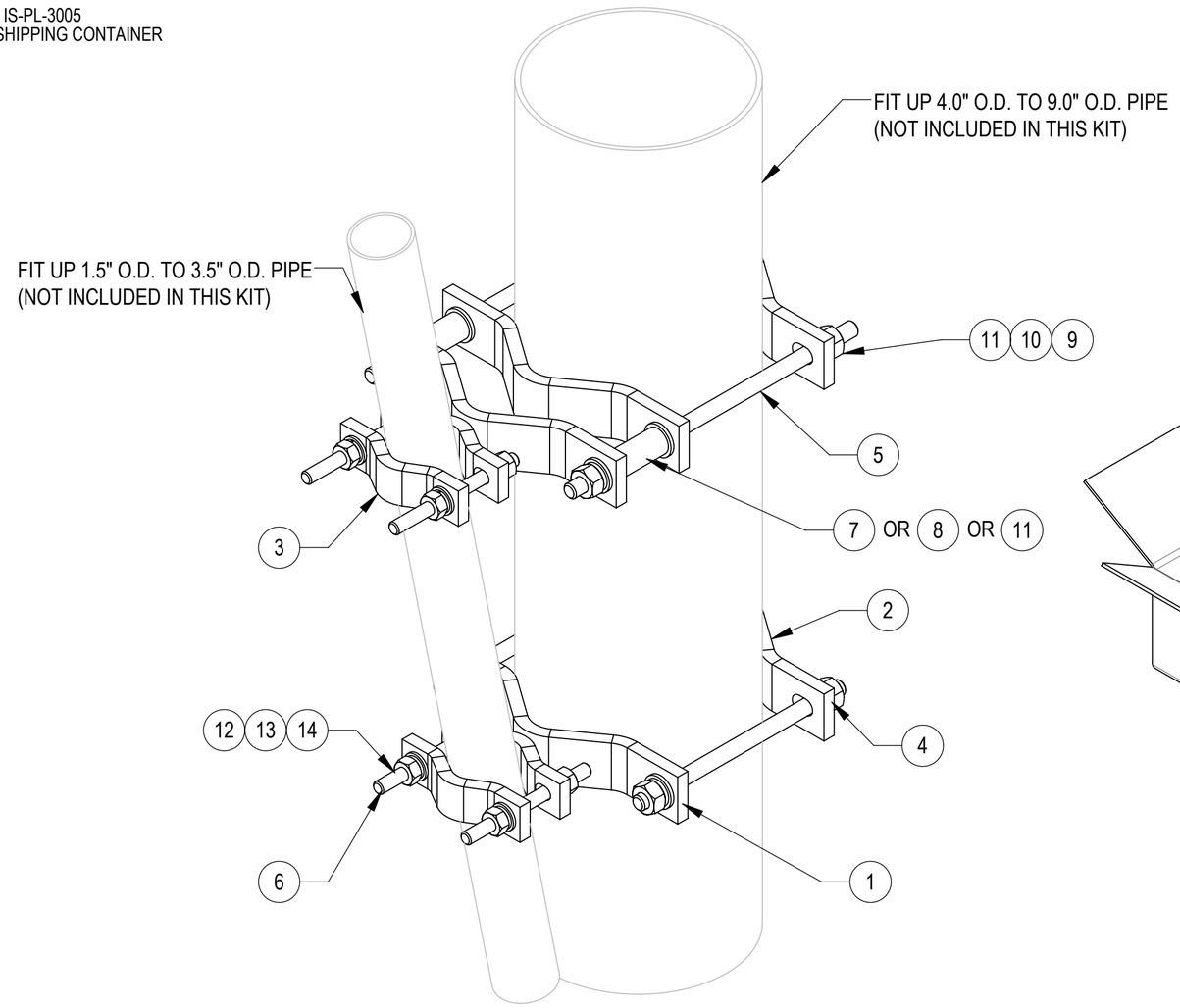

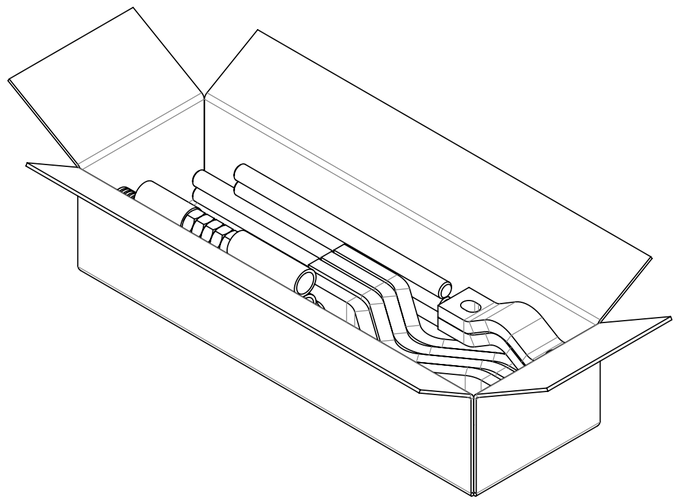

PACKAGE

COMPONENT PART NUMBERS PROVIDED FOR ASSEMBLY PURPOSES;
INDIVIDUAL COMPONENTS MAY BE SHIPPED AS PARTS WITHIN AN INCLUDED KIT.

ITEM	PART NO.	DESCRIPTION	QTY.	WEIGHT	NOTE NO.
1	MSA	ADAPTOR HALF,MEDIUM TO SMALL	2	4.56 LBS	
2	MCP10	CLAMP HALF 1/2" 5/8" H/W 2.5-9 PIPE	3	3.40 LBS	
3	SCP10	CLAMP HALF: 1/2", 9/16" HOLE,4-1/8" (EA)	2	1.20 LBS	
4	MT-381-10	5/8" X 10" THREADED ROD	2	0.80 LBS	
5	MT-382-14	5/8" X 14" THREADED ROD	2	1.12 LBS	
6	MT-379-6	1/2" X 6" GALV THREADED ROD	4	0.33 LBS	
7	OS234	3/4" X 2-1/4" OFFSET SLEEVE	2	0.22 LBS	3.2 & 3.3
8	OS334	3/4" X 3-1/4" OFFSET SLEEVE	2	0.31 LBS	3.2 & 3.3
9	GWF05A	GALV FLAT WASHER HARDENED 5/8", 1.3OD	12	0.04 LBS	
10	GWL-05	5/8" GALV LOCK WASHER	12	0.03 LBS	
11	GN-05A	5/8" GALV HEX NUT (A194 2H)	12	0.12 LBS	3.2
12	GWF04A	1/2" GALV FLAT WASHER (A325)	8	0.02 LBS	
13	GWL-04	1/2" GALV LOCK WASHER	8	0.01 LBS	
14	GN-04A	1/2" GALV HEX NUT (A194 2H)	8	0.07 LBS	

ANDREW® an Amphenol company

TOLERANCES
1 PLACE .X[.X] ± 0.2[6.3]
2 PLACE .XX[.X] ± 0.12[3.0]
3 PLACE .XXX[.X] ± 0.06[1.5]
ANGLES ± 2°

SAP MATERIAL MASTER: **MS-100-SSH**

FINISH

MATERIAL

UNLESS OTHERWISE SPECIFIED DIMENSIONS ARE IN INCHES INTERPRET PER ANSI Y 14.5M-1994

	NAME	DATE
CE	JTS	06APR01
RW	LL1090	10/28/2025
AD	YMENG	10/30/2025
RE	YMENG	10/30/2025

ECN 50105519AMO

TITLE: TAPERED PIPE ADAPTER CLAMP SET

SCALE: **1:3**

DOCUMENT NO.: **MS-100-SSH**

DENSITY		lbs/in³
MASS	30.92	lbs
VOLUME	109.50	in³
SURFACE AREA	791.24	in²
HEIGHT	17.0"	
LENGTH	19.1"	
WIDTH	11.7"	

SIZE: **C**

Auth Group: INSL

MODEL			DRAWING			SHEET
VERSION	STATUS	REVISION	VERSION	STATUS	REVISION	
01	RE	C	01	RE	C	1 OF 1

Confidential