1.0 GENERAL NOTES
- 1.1 ALL METRIC DIMENSIONS ARE IN BRACKETS [X. X]
- 1.2 FOR PATENT INFO: https://www.adwpat.com

2.0 DESIGN NOTES

3.0 MANUFACTURING/SPECIAL REQUIREMENTS
- 3.1 TIGHTEN ALL BOLTS SECURING FLAT PLATES BY THE TURN-OF-NUT METHOD. TIGHTEN ALL U-BOLTS USING TURN-OF-NUT METHOD WITH ATTENTION TO LEAVE EQUAL DISTANCE AND EQUAL FORCE ON EACH LEG OF THE U-BOLT.

4.0 TEST

5.0 PACKAGING
- 5.1 PACKAGING SHALL MEET ANDREW REQUIREMENTS PER DOCUMENT IS-PL-3005
- 5.2 PRINTED DOCUMENT TO BE PLACED INSIDE POLYBAG AND THEN IN SHIPPING CONTAINER
- 5.3 EXTRA HARDWARE MAY BE SUPPLIED,BAGGEO AND SHIPPED

REVISIONS			
REV.	DESCRIPTION	DATE	APPROVED
B	UPDATE ITEM 1	ACG 29FEB05	TP
C	UPDATE ITEM 1 AND TOTAL WEIGHT	ACG 12JAN06	TP
D	UPDATE DESCRIPTION	ACG 29NOV06	TP
E	REDESIGN ITEM #1	MSM 27FEB08	TP
F	UPDATED DRAWING FORMAT TO NEW	JJ1095 06NOV25	BA1025 50105693AMO

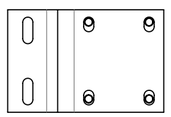

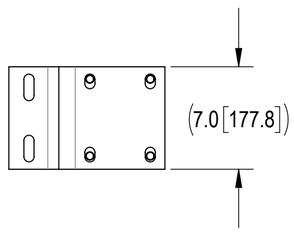

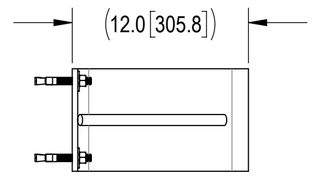

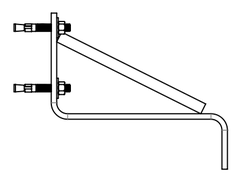

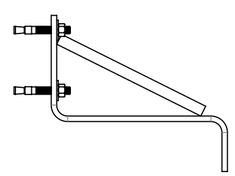

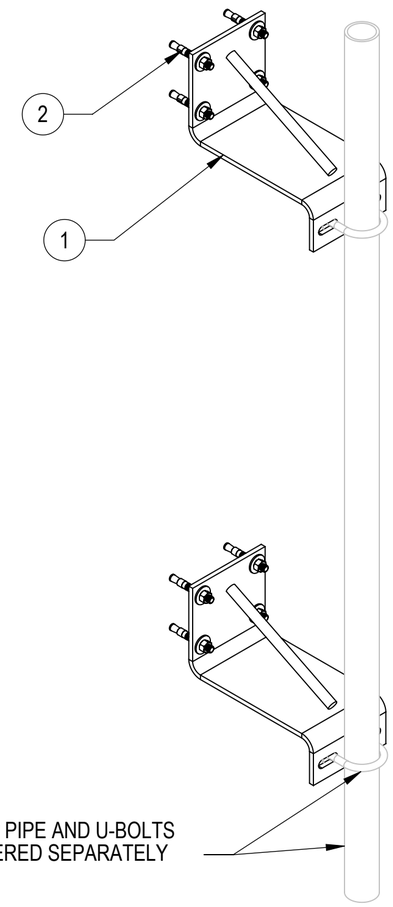

COMPONENT PART NUMBERS PROVIDED FOR ASSEMBLY PURPOSES;
INDIVIDUAL COMPONENTS MAY BE SHIPPED AS PARTS WITHIN AN INCLUDED KIT.

ITEM	PART NO.	DESCRIPTION	QTY.	WEIGHT	NOTE NO.
1	MT221L04	12" WALL MOUNT BRACKET	2	16.80 LBS	
2	MT-271	1/2" ANCHOR BOLT	8	0.26 LBS	

Confidential

DENSITY		lbs/in³
MASS	65.20	lbs
VOLUME	230.42	in³
SURFACE AREA	1861.18	in²
HEIGHT	21.3"	
LENGTH	7.0"	
WIDTH	14.6"	

ANDREW® an Amphenol company

TOLERANCES
1 PLACE .X[.X] ± 0.06[1.5]
2 PLACE .XX[.X] ± 0.03[0.8]
3 PLACE .XXX[.X] ± 0.010[0.3]
ANGLES ± 2°

SAP MATERIAL MASTER: **MT-222L**

FINISH

MATERIAL

UNLESS OTHERWISE SPECIFIED DIMENSIONS ARE IN INCHES INTERPRET PER ANSI Y 14.5M-1994

	NAME	DATE
CE	ACG	02/09/2005
RW	JJ1095	11/17/2025
AD	YMENG	11/18/2025
RE	YMENG	11/18/2025
ECN	50105693AMO	

TITLE: **ADJ. WALL MOUNT FOR SOLID WALLS**

SCALE: **1:8**

DOCUMENT NO.: **MT-222L**

SIZE: **C**

Auth Group: INSL

MODEL			DRAWING			SHEET
VERSION	STATUS	REVISION	VERSION	STATUS	REVISION	
01	RE	F	01	RE	F	1 OF 1