1.0 GENERAL NOTES
- 1.1 ALL METRIC DIMENSIONS ARE IN BRACKETS [X. X]
- 1.2 FOR PATENT INFO: https://www.adwpat.com

2.0 DESIGN NOTES
- 2.1 ANY HAZARDS OR OBSTRUCTIONS TO THE CLIMBING FACILITY AND SAFETY CLIMB MUST BE IDENTIFIED PRIOR TO INSTALLING THE APPURTENANCE. ADDITIONAL PRODUCTS MAY BE REQUIRED TO MAINTAIN THE INTEGRITY OF THE SAFETY CLIMB. DURING INSTALLATION, TEMPORARY AND/OR PERMANENT PRECAUTIONARY MEASURES SHOULD BE TAKEN TO PRESERVE THE CLIMBING FACILITY AND/OR SAFETY CLIMB.
- 2.2 FITS MONOPOLES 15"-50".

3.0 MANUFACTURING/SPECIAL REQUIREMENTS
- 3.1 TIGHTEN ALL BOLTS 3/8" OR LARGER SECURING FLAT PLATES SNUG TIGHT. TIGHTEN ALL THREADED RODS SNUG TIGHT, WITH ATTENTION TO LEAVE EQUAL DISTANCE AND EQUAL FORCE ON EACH LEG OF THREADED ROD.
- 3.2 SNUG TIGHT IS DEFINED AS THE CONDITION OBTAINED WITH A FEW IMPACTS OF AN IMPACT WRENCH OR THE FULL EFFORT OF AN INSTALLER USING AN ORDINARY SPUD WRENCH TO BRING THE CONNECTED LAYERS (PLIES) OF STEEL INTO FULL CONTACT.
- 3.3 FOR BOLTS IN A PATTERN, TIGHTEN IN A CRISS-CROSS OR STAR SEQUENCE, INCREASING TORQUE IN GRADUAL STEPS UNTIL SNUG TIGHT.
- 3.4 FIELD CUT ALL-THREAD AS NEEDED.

4.0 TEST

5.0 PACKAGING
- 5.1 PACKAGING SHALL MEET ANDREW REQUIREMENTS PER DOCUMENT IS-PL-3005
- 5.2 PRINTED DOCUMENT TO BE PLACED INSIDE POLYBAG AND THEN IN SHIPPING CONTAINER
- 5.3 EXTRA HARDWARE MAY BE SUPPLIED, BAGGED AND SHIPPED

REVISIONS			
REV.	DESCRIPTION	DATE	APPROVED
A	INITIAL RELEASE	MSM 22OCT12	TP
B	UPDATED DRAWING FORMAT	NSUN 08JAN26	BA1025 50106501AMO

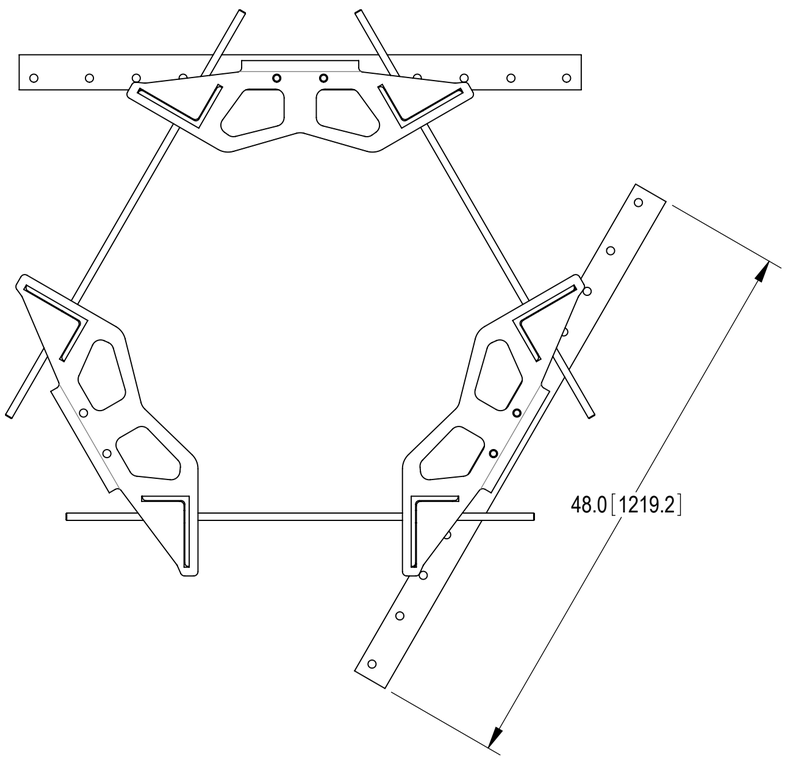

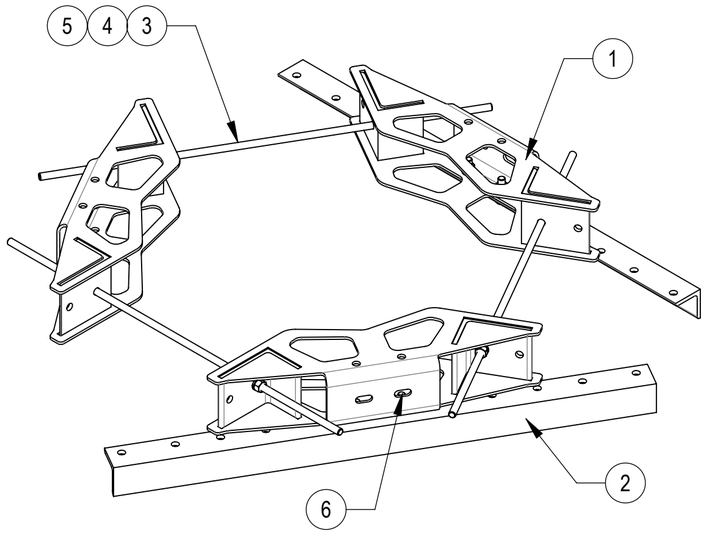

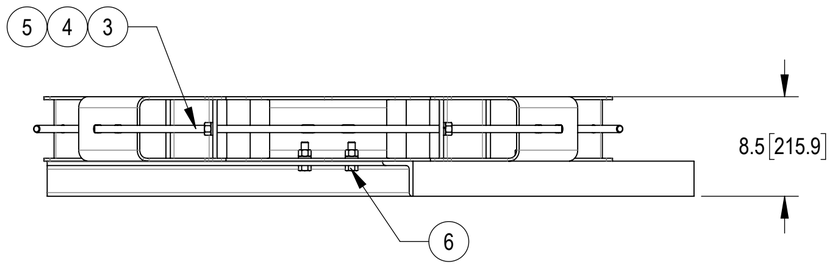

COMPONENT PART NUMBERS PROVIDED FOR ASSEMBLY PURPOSES;
INDIVIDUAL COMPONENTS MAY BE SHIPPED AS PARTS WITHIN AN INCLUDED KIT.

ITEM	PART NO.	DESCRIPTION	QTY.	WEIGHT	NOTE NO.
1	RMSSM03	15-50" BACK TIE RING MOUNT WELDMENT	3	28.96 LBS	
2	RMSS01	RM-SS TIEBACK ANGLE	2	27.78 LBS	
3	MT38240	5/8" X 40" GALV THREADED ROD	3	3.46 LBS	
4	GWL-05	5/8" GALV LOCK WASHER	6	0.03 LBS	
5	GN-05	5/8" GALV HEX NUT	6	0.08 LBS	
6	GB-0520A	5/8" X 2" GALV BOLT KIT (A325)	4	0.26 LBS	

Confidential

DENSITY		lbs/in³
MASS	165.97	lbs
VOLUME	5222.82	in³
SURFACE AREA	22789.39	in²
HEIGHT	8.5"	
LENGTH	57.9"	
WIDTH	56.4"	

ANDREW® an Amphenol company

TOLERANCES
1 PLACE .X[.X] ± 0.12[3.0]
2 PLACE .XX[.X] ± 0.06[1.5]
3 PLACE .XXX[.X] ± 0.030[0.8]
ANGLES ± 2°

SAP MATERIAL MASTER: RM-SS-M2

FINISH

MATERIAL

UNLESS OTHERWISE SPECIFIED DIMENSIONS ARE IN INCHES INTERPRET PER ANSI Y 14.5M-1994

	NAME	DATE
CE	MSM	22OCT12
RW	NSUN	01/08/2026
AD	YMENG	01/15/2026
RE	YMENG	01/15/2026

ECN 50106501AMO

TITLE: 15-50" MONOPOLE TIE BACK RING MOUNT

SCALE: 1:10

DOCUMENT NO.: RM-SS-M2

SIZE: C

Auth Group: INSL

MODEL			DRAWING			SHEET
VERSION	STATUS	REVISION	VERSION	STATUS	REVISION	
01	RE	B	01	RE	B	1 OF 1