1.0 GENERAL NOTES
- 1.1 ALL METRIC DIMENSIONS ARE IN BRACKETS [X. X]
- 1.2 FOR PATENT INFO: https://www.adwpat.com

2.0 DESIGN NOTES

3.0 MANUFACTURING/SPECIAL REQUIREMENTS
- 3.1 TIGHTEN ALL BOLTS 3/8" OR LARGER SECURING FLAT PLATES SNUG TIGHT. TIGHTEN ALL THREADED RODS SNUG TIGHT, WITH ATTENTION TO LEAVE EQUAL DISTANCE AND EQUAL FORCE ON EACH LEG OF THREADED ROD.
- 3.2 SNUG TIGHT IS DEFINED AS THE CONDITION OBTAINED WITH A FEW IMPACTS OF AN IMPACT WRENCH OR THE FULL EFFORT OF AN INSTALLER USING AN ORDINARY SPUD WRENCH TO BRING THE CONNECTED LAYERS (PLIES) OF STEEL INTO FULL CONTACT.
- 3.3 FOR BOLTS IN A PATTERN, TIGHTEN IN A CRISS-CROSS OR STAR SEQUENCE, INCREASING TORQUE IN GRADUAL STEPS UNTIL SNUG TIGHT.

4.0 TEST

5.0 PACKAGING
- 5.1 PACKAGING SHALL MEET ANDREW REQUIREMENTS PER DOCUMENT IS-PL-3005
- 5.2 PRINTED DOCUMENT TO BE PLACED INSIDE POLYBAG AND THEN IN SHIPPING CONTAINER
- 5.3 EXTRA HARDWARE MAY BE SUPPLIED, BAGGED AND SHIPPED

REVISIONS			
REV.	DESCRIPTION	DATE	APPROVED
A	INITIAL RELEASE	ACG 04/25/05	
B	UPDATED DRAWING TO NEW FORMAT	RY1002 29DEC25	BA1025 50106322AMO

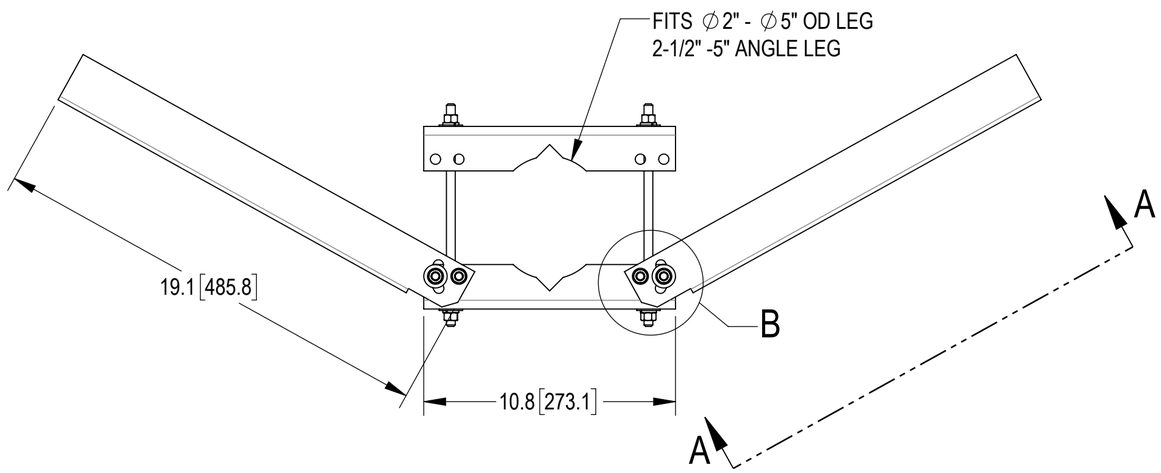

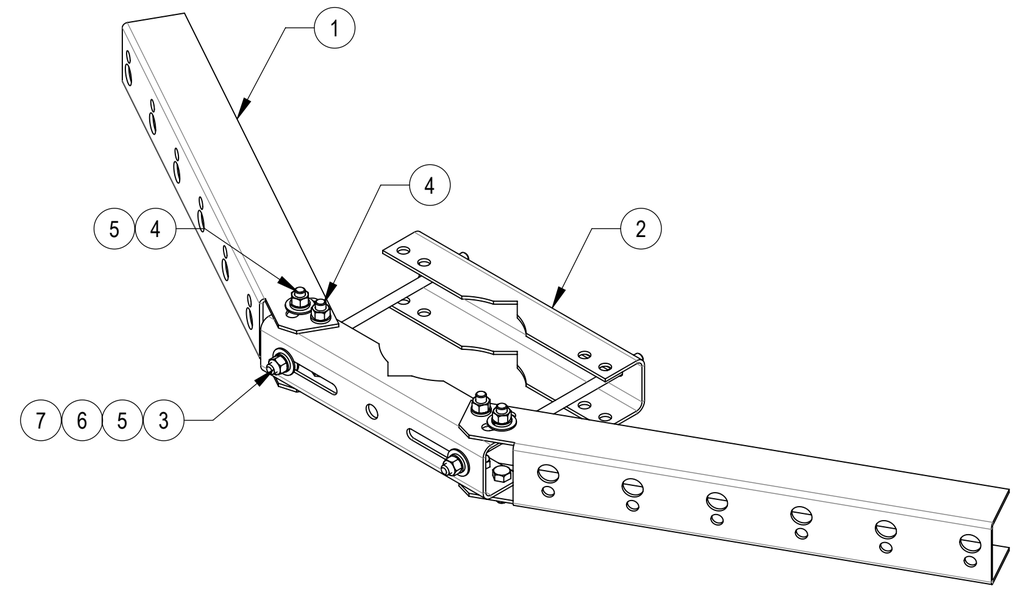

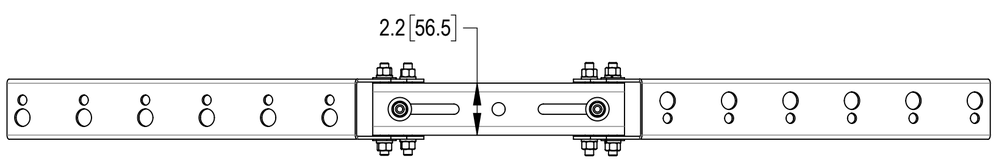

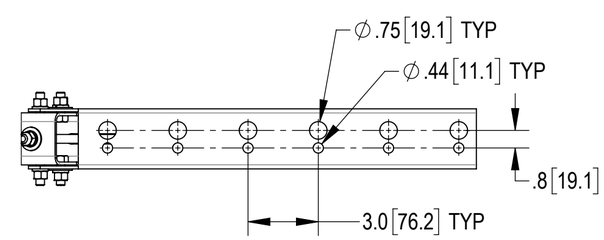

VIEW A-A
29.0°
SCALE 1 : 5

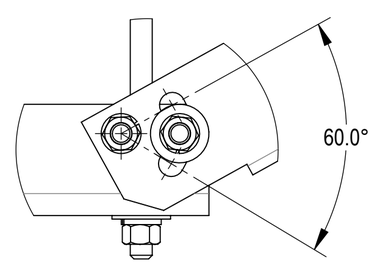

DETAIL B
SCALE 1 : 2

COMPONENT PART NUMBERS PROVIDED FOR ASSEMBLY PURPOSES; INDIVIDUAL COMPONENTS MAY BE SHIPPED AS PARTS WITHIN AN INCLUDED KIT.

ITEM	PART NO.	DESCRIPTION	QTY.	WEIGHT	NOTE NO.
1	SSFB02	STAR SUPPORT SINGLE FACE BRACKET	2	4.10 LBS	
2	SS255001	STAR SUPPORT CLAMP	2	1.84 LBS	
3	GD03950	3/8" X 9-1/2" GALV THREADED ROD	2	0.30 LBS	
4	GB-03105	3/8" X 1" GALV BOLT KIT	8	0.05 LBS	
5	GWF-03	3/8" GALV FLAT WASHER	10	0.01 LBS	
6	GWL-03	3/8" GALV LOCK WASHER	4	0.01 LBS	
7	GN-03	3/8" GALV HEX NUT	6	0.02 LBS	

ANDREW® an Amphenol company

TOLERANCES
1 PLACE .X[.X] ± 0.06[1.5]
2 PLACE .XX[.X] ± 0.03[0.8]
3 PLACE .XXX[.X] ± 0.010[0.3]
ANGLES ± 2°

SAP MATERIAL MASTER: SS-2FB2550

FINISH

MATERIAL

UNLESS OTHERWISE SPECIFIED DIMENSIONS ARE IN INCHES INTERPRET PER ANSI Y 14.5M-1994

	NAME	DATE
CE	ACG	04/25/05
RW	RY1002	12/23/2025
AD	YMENG	12/23/2025
RE	YMENG	12/23/2025

ECN 50106322AMO

TITLE: STAR SUPPORT DUAL FACE BRACKET 2"-5"

SCALE 1:4

DOCUMENT NO. SS-2FB2550

DENSITY		lbs/in³
MASS	13.32	lbs
VOLUME	47.11	in³
SURFACE AREA	792.96	in²
HEIGHT	4"	
LENGTH		
WIDTH		

SIZE: C

Auth Group: INSL

MODEL VERSION	MODEL STATUS	MODEL REVISION	DRAWING VERSION	DRAWING STATUS	DRAWING REVISION	SHEET
01	RE	B	01	RE	B	1 OF 1

Confidential