1.0 GENERAL NOTES
- 1.1 ALL METRIC DIMENSIONS ARE IN BRACKETS [X. X]
- 1.2 FOR PATENT INFO: https://www.adwpat.com

2.0 DESIGN NOTES

3.0 MANUFACTURING/SPECIAL REQUIREMENTS
- 3.1 TIGHTEN ALL BOLTS 3/8" OR LARGER SECURING FLAT PLATES SNUG TIGHT. TIGHTEN ALL U-BOLTS/THREADED RODS SNUG TIGHT, WITH ATTENTION TO LEAVE EQUAL DISTANCE AND EQUAL FORCE ON EACH LEG OF U-BOLT/THREADED ROD.
- 3.2 SNUG TIGHT IS DEFINED AS THE CONDITION OBTAINED WITH A FEW IMPACTS OF AN IMPACT WRENCH OR THE FULL EFFORT OF AN INSTALLER USING AN ORDINARY SPUD WRENCH TO BRING THE CONNECTED LAYERS (PLIES) OF STEEL INTO FULL CONTACT.
- 3.3 FOR BOLTS IN A PATTERN, TIGHTEN IN A CRISS-CROSS OR STAR SEQUENCE, INCREASING TORQUE IN GRADUAL STEPS UNTIL SNUG TIGHT.

4.0 TEST

5.0 PACKAGING
- 5.1 PACKAGING SHALL MEET ANDREW REQUIREMENTS PER DOCUMENT IS-PL-3005
- 5.2 PRINTED DOCUMENT TO BE PLACED INSIDE POLYBAG AND THEN IN SHIPPING CONTAINER
- 5.3 EXTRA HARDWARE MAY BE SUPPLIED,BAGGEO AND SHIPPED

REVISIONS			
REV.	DESCRIPTION	DATE	APPROVED
A	INITIAL RELEASE	DRR 30OCT12	TP
B	UPDATED DRAWING FORMAT TO NEW	JJ1095 29JAN26	BA1025 50106804AMO

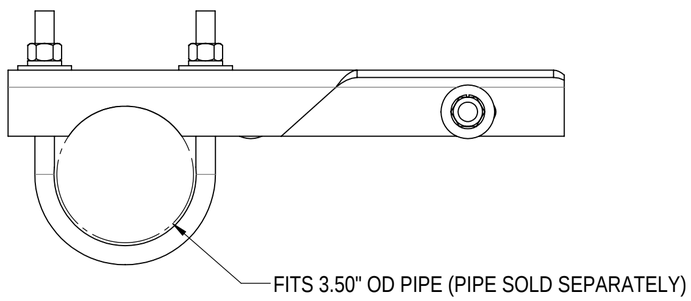

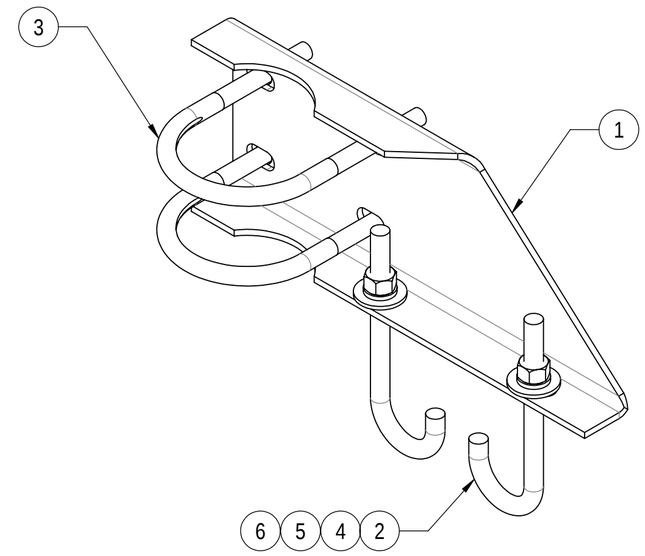

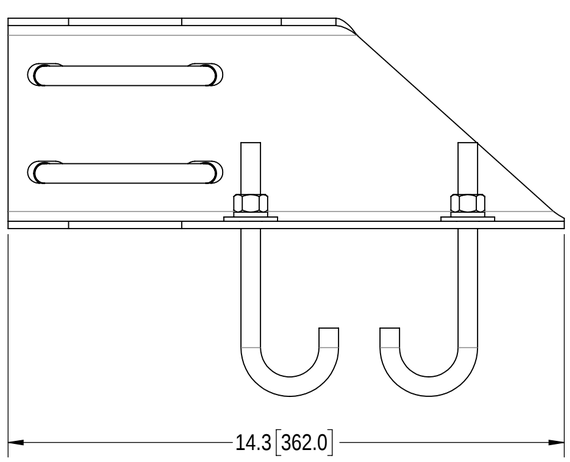

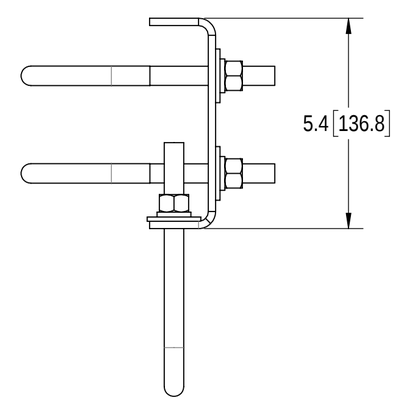

COMPONENT PART NUMBERS PROVIDED FOR ASSEMBLY PURPOSES;
INDIVIDUAL COMPONENTS MAY BE SHIPPED AS PARTS WITHIN AN INCLUDED KIT.

ITEM	PART NO.	DESCRIPTION	QTY.	WEIGHT	NOTE NO.
1	WBLB0501	5" WAVEGUIDE BRIDGE SUPPORT BRACKET	1	4.52 LBS	
2	WBJB6	1/2" J-BOLT	2	0.49 LBS	
3	GUB-4356	1/2" X 3-5/8" X 6" GALV U-BOLT	2	0.81 LBS	
4	GWF-04	1/2" GALV FLAT WASHER	2	0.04 LBS	
5	GWL-04	1/2" GALV LOCK WASHER	2	0.01 LBS	
6	GN-04	1/2" GALV HEX NUT	2	0.04 LBS	

ANDREW® an Amphenol company

TOLERANCES
1 PLACE .X[.X] ± 0.12[3.0]
2 PLACE .XX[.X] ± 0.06[1.5]
3 PLACE .XXX[.X] ± 0.03[0.8]
ANGLES ± 2°

SAP MATERIAL MASTER: WB-LB05-3

FINISH

MATERIAL

UNLESS OTHERWISE SPECIFIED DIMENSIONS ARE IN INCHES INTERPRET PER ANSI Y 14.5M-1994

	NAME	DATE
CE	DRR	10/30/2012
RW	JJ1095	01/29/2026
AD	YMENG	02/09/2026
RE	YMENG	03/01/2026

ECN 50106804AMO

TITLE: 5" WAVEGUIDE BRIDGE SUPPORT BRACKET

SCALE: 1:4

DOCUMENT NO.: WB-LB05-3

DENSITY		lbs/in³
MASS	7.70	lbs
VOLUME	27.27	in³
SURFACE AREA	298.54	in²
HEIGHT	6.5"	
LENGTH	14.3"	
WIDTH	9.7"	

SIZE: C

Auth Group: INSL

MODEL VERSION	MODEL STATUS	MODEL REVISION	DRAWING VERSION	DRAWING STATUS	DRAWING REVISION
00	RE	A	01	RE	B

SHEET 1 OF 1

Confidential