1.0 GENERAL NOTES
- 1.1 ALL METRIC DIMENSIONS ARE IN BRACKETS [X. X]
- 1.2 FOR PATENT INFO: https://www.adwpat.com

2.0 DESIGN NOTES

3.0 MANUFACTURING/SPECIAL REQUIREMENTS
- 3.1 TIGHTEN ALL BOLTS 3/8" OR LARGER SECURING FLAT PLATES SNUG TIGHT. TIGHTEN ALL THREADED RODS SNUG TIGHT, WITH ATTENTION TO LEAVE EQUAL DISTANCE AND EQUAL FORCE ON EACH LEG OF THREADED ROD.
- 3.2 SNUG TIGHT IS DEFINED AS THE CONDITION OBTAINED WITH A FEW IMPACTS OF AN IMPACT WRENCH OR THE FULL EFFORT OF AN INSTALLER USING AN ORDINARY SPUD WRENCH TO BRING THE CONNECTED LAYERS (PLIES) OF STEEL INTO FULL CONTACT.
- 3.3 FOR BOLTS IN A PATTERN, TIGHTEN IN A CRISS-CROSS OR STAR SEQUENCE, INCREASING TORQUE IN GRADUAL STEPS UNTIL SNUG TIGHT.

4.0 TEST

5.0 PACKAGING
- 5.1 PACKAGING SHALL MEET ANDREW REQUIREMENTS PER DOCUMENT IS-PL-3005
- 5.2 PRINTED DOCUMENT TO BE PLACED INSIDE POLYBAG AND THEN IN SHIPPING CONTAINER
- 5.3 EXTRA HARDWARE MAY BE SUPPLIED, BAGGED AND SHIPPED

REVISIONS

REV.	DESCRIPTION	DATE	APPROVED
A	INITIAL RELEASE	MLO 04NOV99	TP
B	-	-	-
C	REVISED & REDRAWN	DMW 04MAY01	TP
D	UPDATE ALL-THREAD PART NUMBER	JTS 05JUN01	TP
E	UPDATE Z-BRACKET & ADD FLAT WASHERS	ACG 02MAR06	TP
F	ZB-H4 WAS ZBH4.01	MSM 05AUG10	TP
G	UPDATED DRAWING FORMAT	NSUN 25FEB26	BA1025 50107201AMO

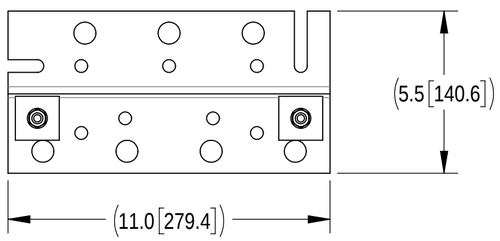

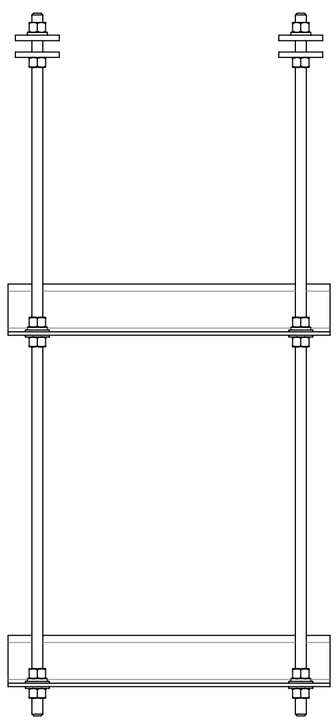

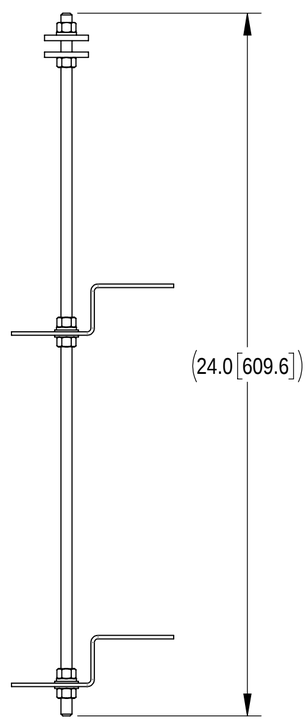

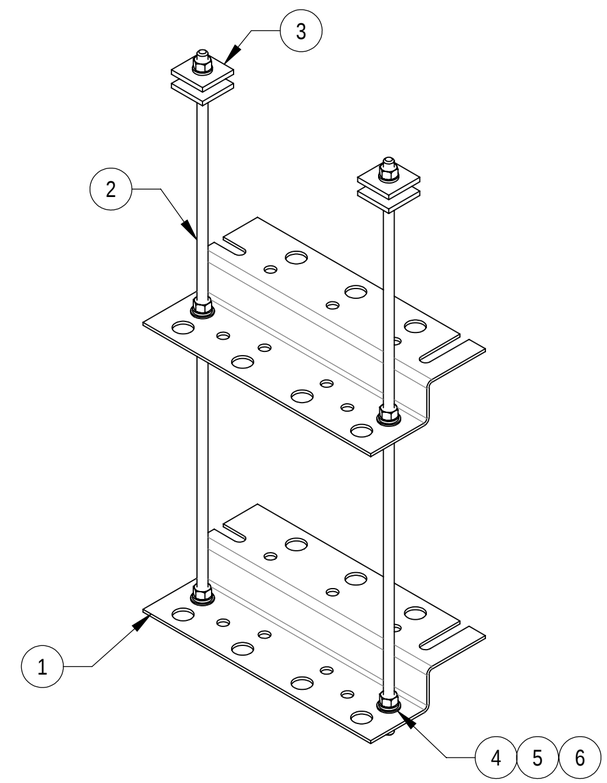

COMPONENT PART NUMBERS PROVIDED FOR ASSEMBLY PURPOSES;
INDIVIDUAL COMPONENTS MAY BE SHIPPED AS PARTS WITHIN AN INCLUDED KIT.

ITEM	PART NO.	DESCRIPTION	QTY.	WEIGHT	NOTE NO.
1	ZB-H4	HORIZONTAL Z-BRACKET, 4 RUNS OF COAX	2	2.40 LBS	
2	MT-373-24	3/8" X 24" SS THREADED ROD	2	0.75 LBS	
3	MT-387	SQUARE WASHER 1-1/2"X1-1/2" W/ 7/16 HOLE	4	0.11 LBS	
4	SWF-03	3/8" SS FLAT WASHER	8	0.01 LBS	
5	SWL-03	3/8" SS LOCK WASHER	6	0.01 LBS	
6	SN-03	3/8" SS HEX NUT	12	0.02 LBS	

ANDREW an Amphenol company

TOLERANCES
1 PLACE .X[.X] ± 0.06[1.5]
2 PLACE .XX[.X] ± 0.03[0.8]
3 PLACE .XXX[.X] ± 0.010[0.3]
ANGLES ± 2°

SAP MATERIAL MASTER: WB-TK12D

FINISH

MATERIAL

UNLESS OTHERWISE SPECIFIED DIMENSIONS ARE IN INCHES INTERPRET PER ANSI Y 14.5M-1994

	NAME	DATE
CE	MLO	04NOV99
RW	NSUN	02/25/2026
AD	YMENG	02/27/2026
RE	YMENG	03/05/2026

ECN 50107201AMO

TITLE: TRAPEZE KIT, 12" WIDE, 2 RUNGS

SCALE 1:4

DOCUMENT NO. WB-TK12D

DENSITY		lbs/in³
MASS	7.05	lbs
VOLUME	25.02	in³
SURFACE AREA	410.19	in²
HEIGHT	24.0"	
LENGTH	11.0"	
WIDTH	5.5"	

SIZE C

Auth Group INSL

MODEL VERSION	MODEL STATUS	MODEL REVISION	DRAWING VERSION	DRAWING STATUS	DRAWING REVISION	SHEET
01	RE	G	01	RE	G	1 OF 1

Confidential